SHELF COUTURE

1200x140

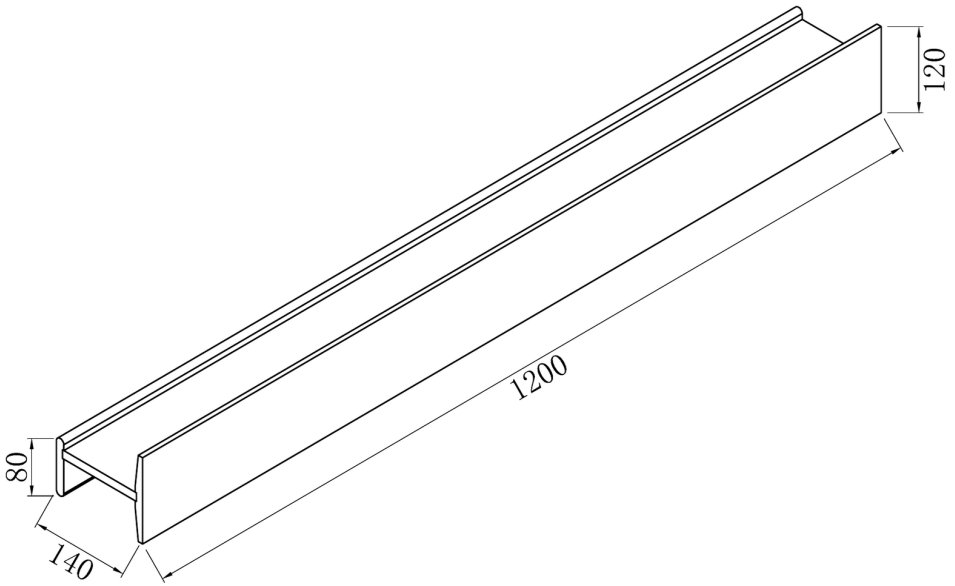

Code

BB-H-1200-MW

Matt White

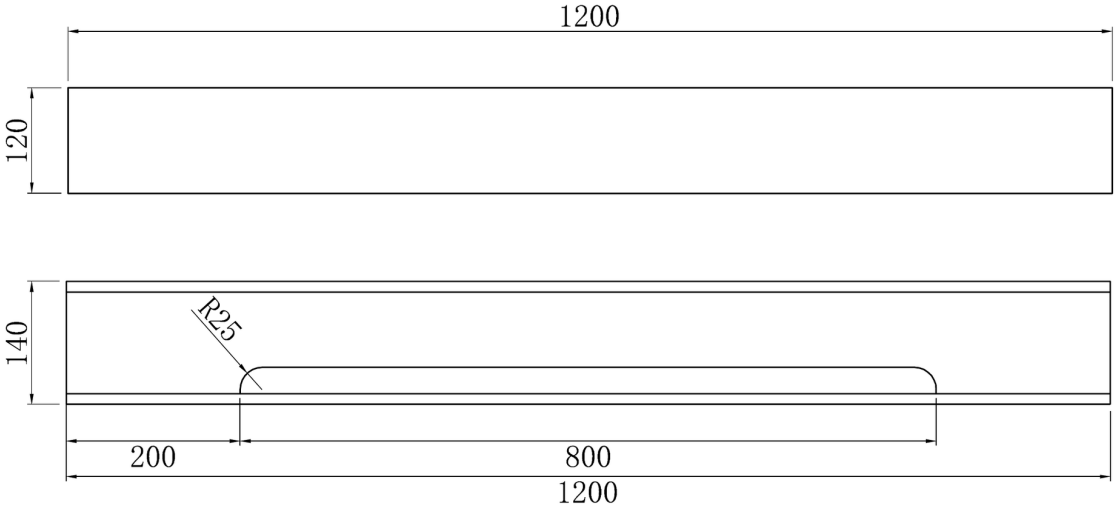

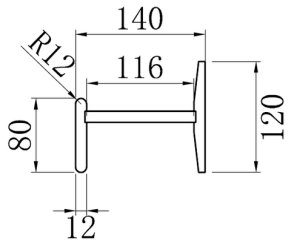

– by –

elenni
Kitchen & Bathroom Collection

www.elenni.com.au
customerservice@elenni.com.au
Contact us 07 32099644
1 Bryants Rd, Loganholme QLD 4129