SHELF COUTURE

1400x140

Code

BB-H-1400-MW

Matt White

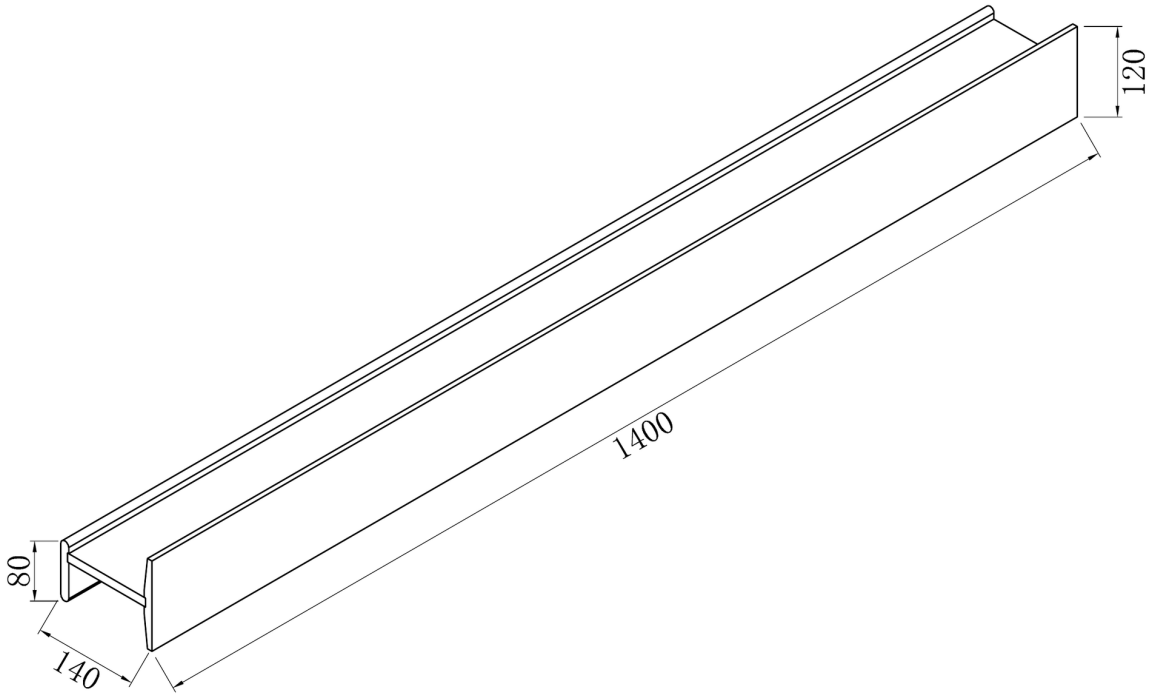

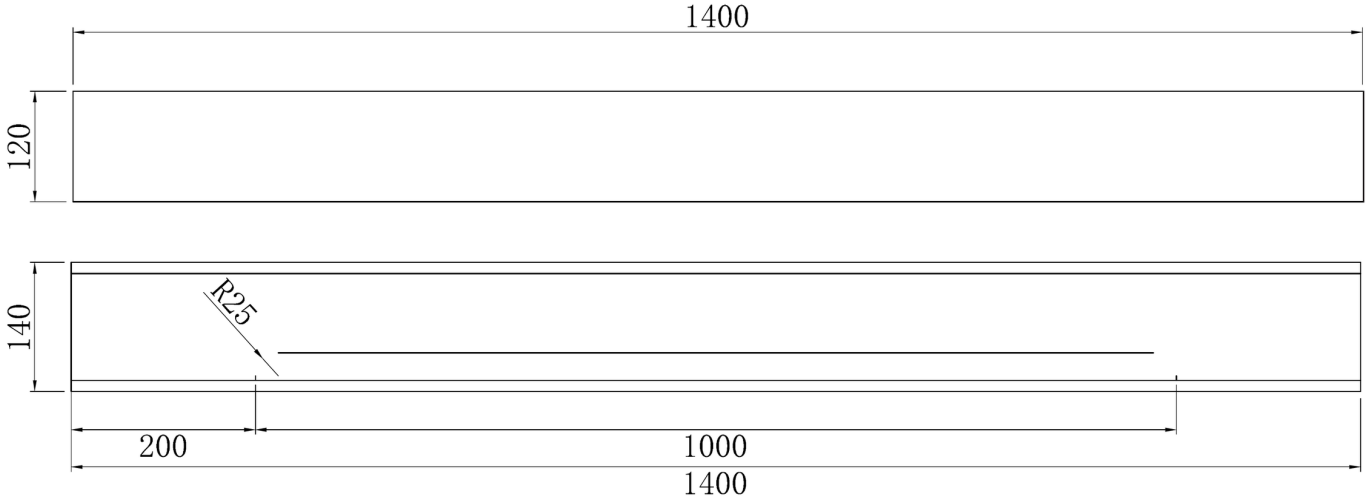

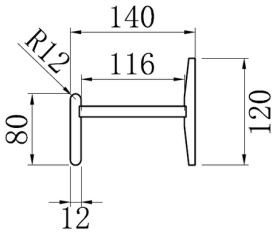

– by –

elenni

Kitchen & Bathroom Collection

www.elenni.com.au
customerservice@elenni.com.au
Contact us 07 32099644
1 Bryants Rd, Loganholme QLD 4129