SHELF COUTURE

800x140

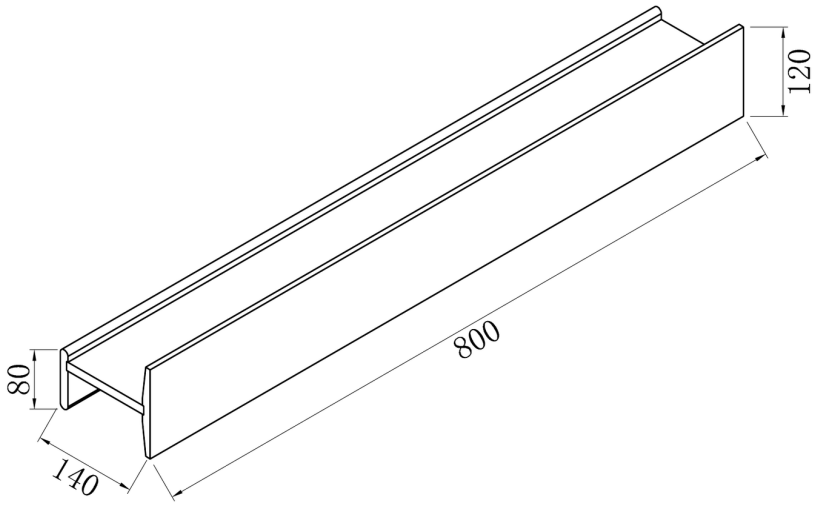

Code

BB-H-800-MW

Matt White

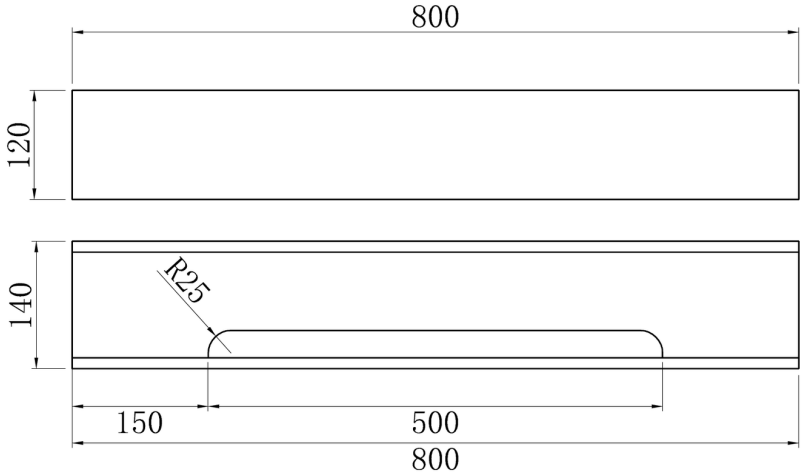

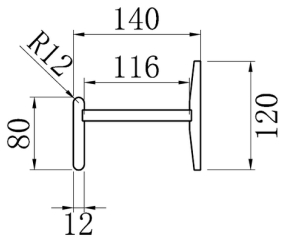

– by –

elenni

Kitchen & Bathroom Collection

www.elenni.com.au
customerservice@elenni.com.au
Contact us 07 32099644
1 Bryants Rd, Loganholme QLD 4129