MP04-A
32mm BASIN POP-UP WASTE - slotted/overflow

meir®



FEATURES

- Solid DZR brass construction
- Box Weight 0.27 kg

CARE

- Do not install tapware using any form of acetone silicones.
- Do not apply physical items (such as tools) directly to product.
- Never use house-hold or commercial detergents, citrus based cleaners, or abrasive cleaners.
- Clean using a mild washing soap solution rinsed, and dry with a soft cloth.
- Check for any product defects before installation.
- Refer to the installation manual for correct installation.

SPECIFICATIONS

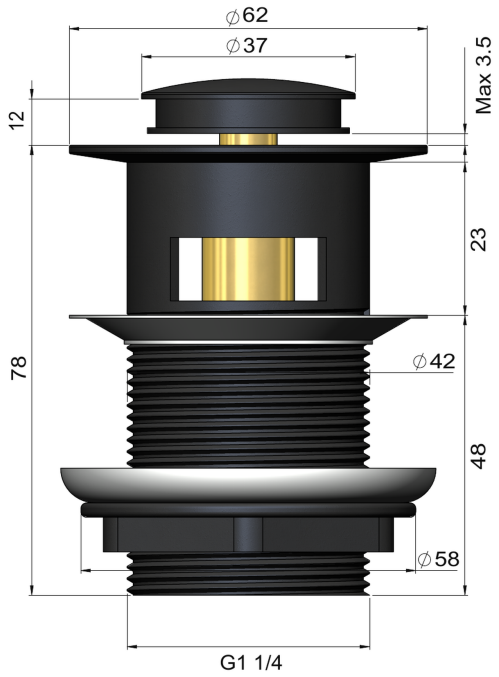

CREDENTIALS

- Watermark AS/NZS 3718:2005
- KUKreg4 certified

– by –
elenni
Kitchen & Bathroom Collection
www.elenni.com.au
customerservice@elenni.com.au
Contact us 07 32099644
1 Bryants Rd, Loganholme QLD 4129