SINK ACCESSORIES

COVERED SINK BASKET WASTE WITH OVERFLOW

SPECIFICATIONS



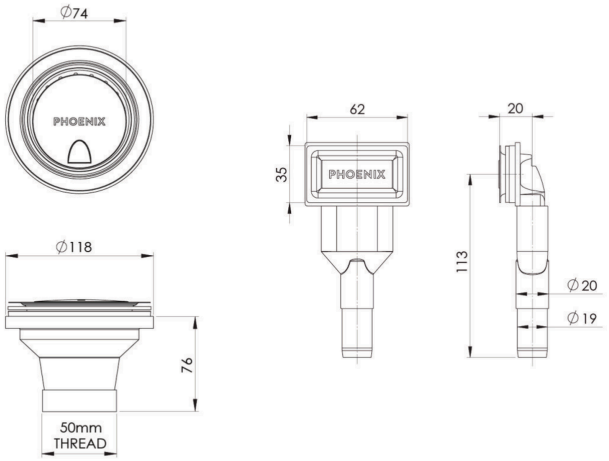

AVAILABLE IN

340-8584-16	340-8584-10	340-8584-24	340-8584-12
Brushed Carbon	Matte Black	Brushed Bronze	Brushed Gold

INFORMATION

WATER RATING
N/A

MAINTENANCE AND CARE:

— All surfaces should be cleaned with mild liquid detergent or soap and water.
— Do not use cream cleaners or citrus based cleaning products, as they are abrasive.
— Use of unsuitable cleaning agents may damage the surface.
— Any damage caused in this way will not be covered by warranty.

www.elenni.com.au
customerservice@elenni.com.au
Contact us 07 32099644
1 Bryants Rd, Loganholme QLD 4129