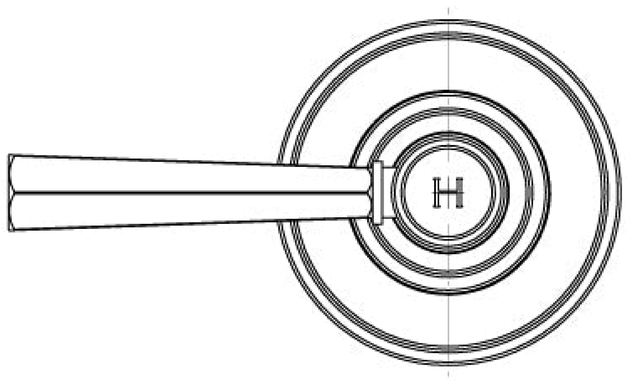

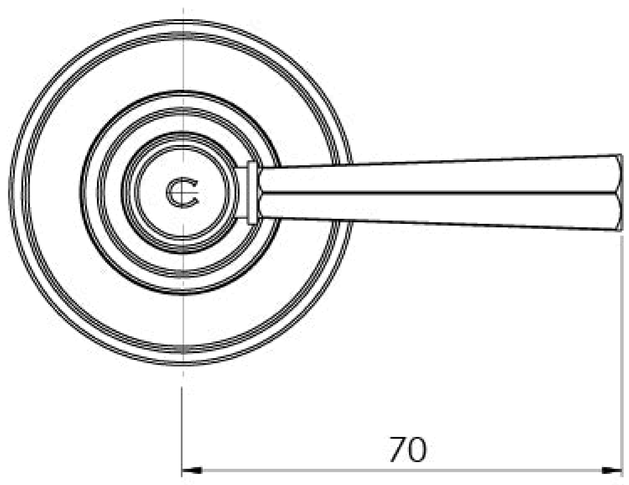
70

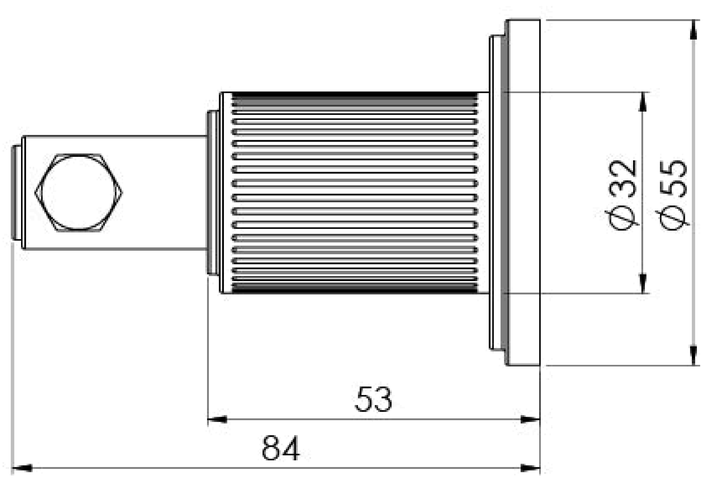
ϕ32
ϕ55
53
84