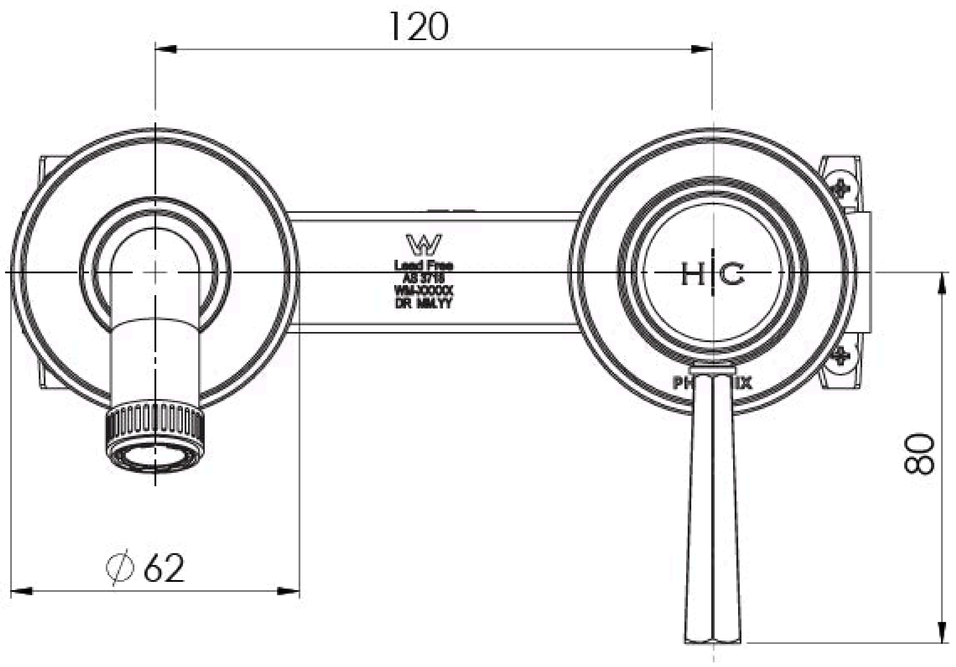
120
Lead Free
AS 3718
WM-XXXXX
DR MMYY
H C
80
∅62

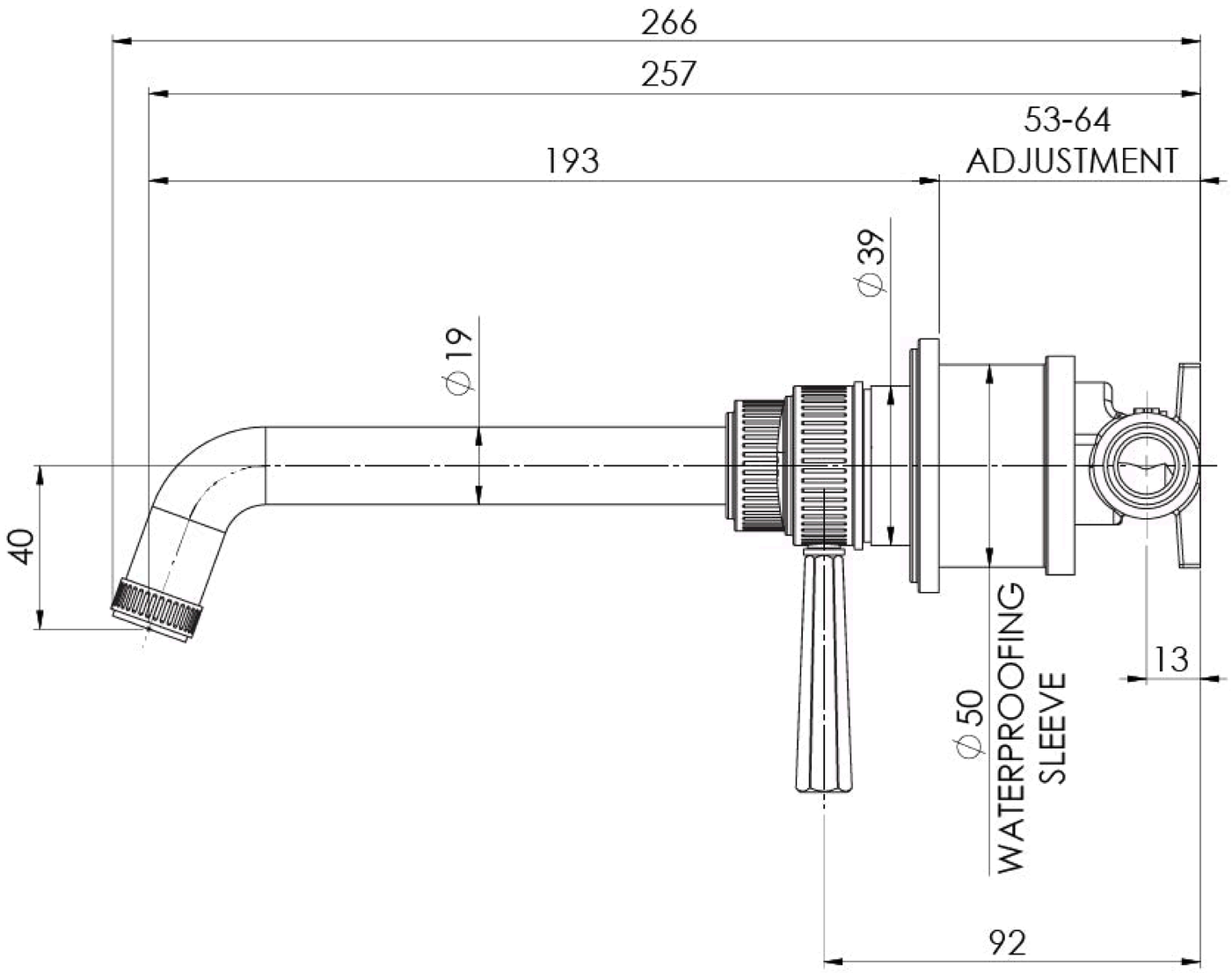
266
257
53-64
ADJUSTMENT
193
∅39
∅19
40
∅50
WATERPROOFING
SLEEVE
13
92