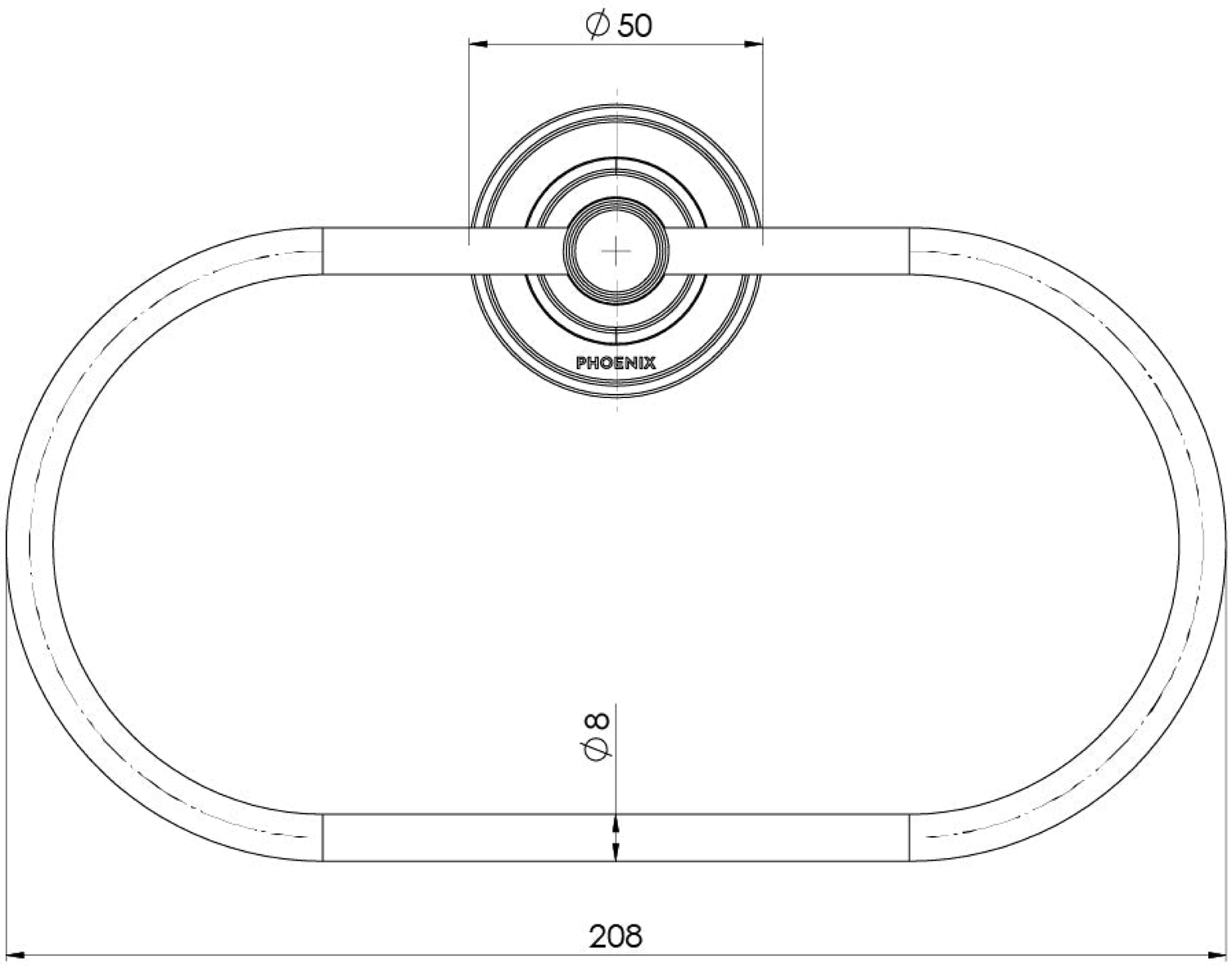
∅50
PHOENIX
∅8
208

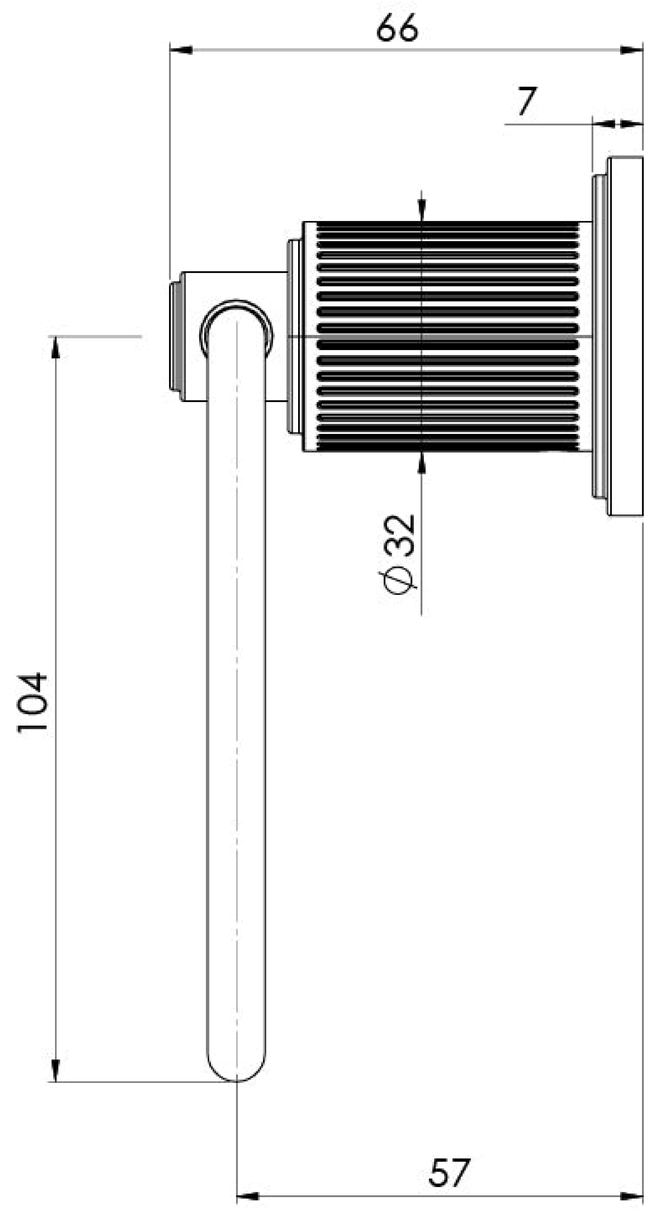
66
7
∅32
104
57