Ormond Hand Shower
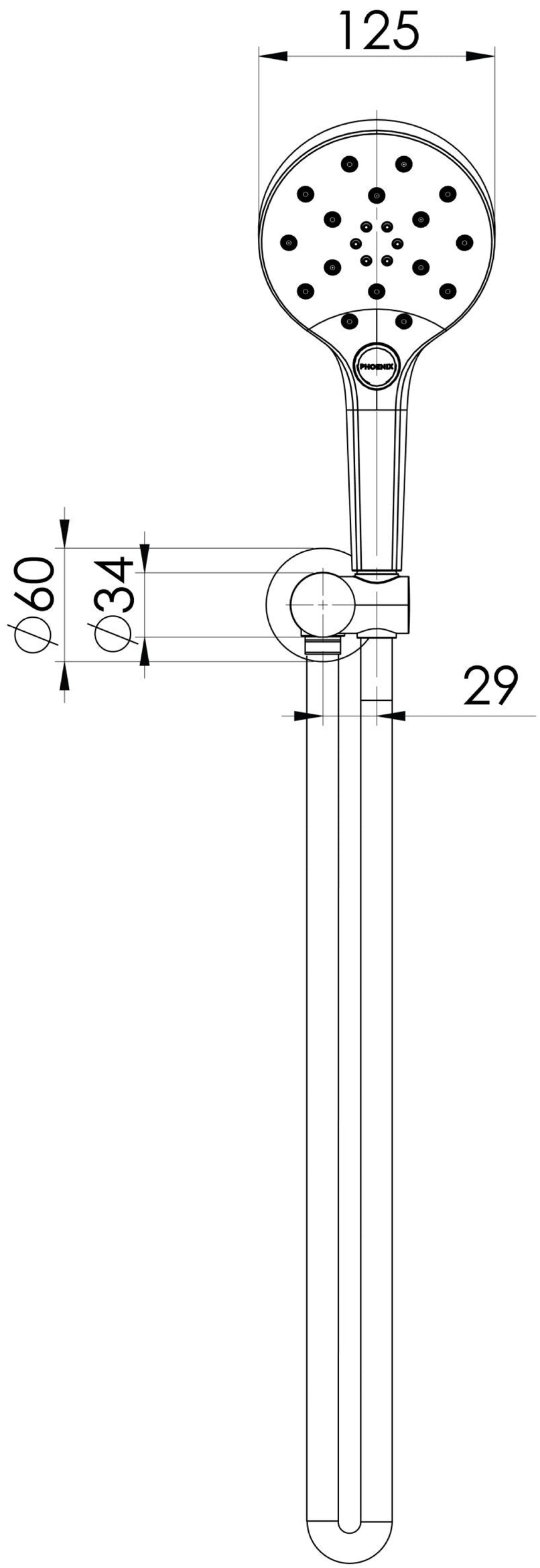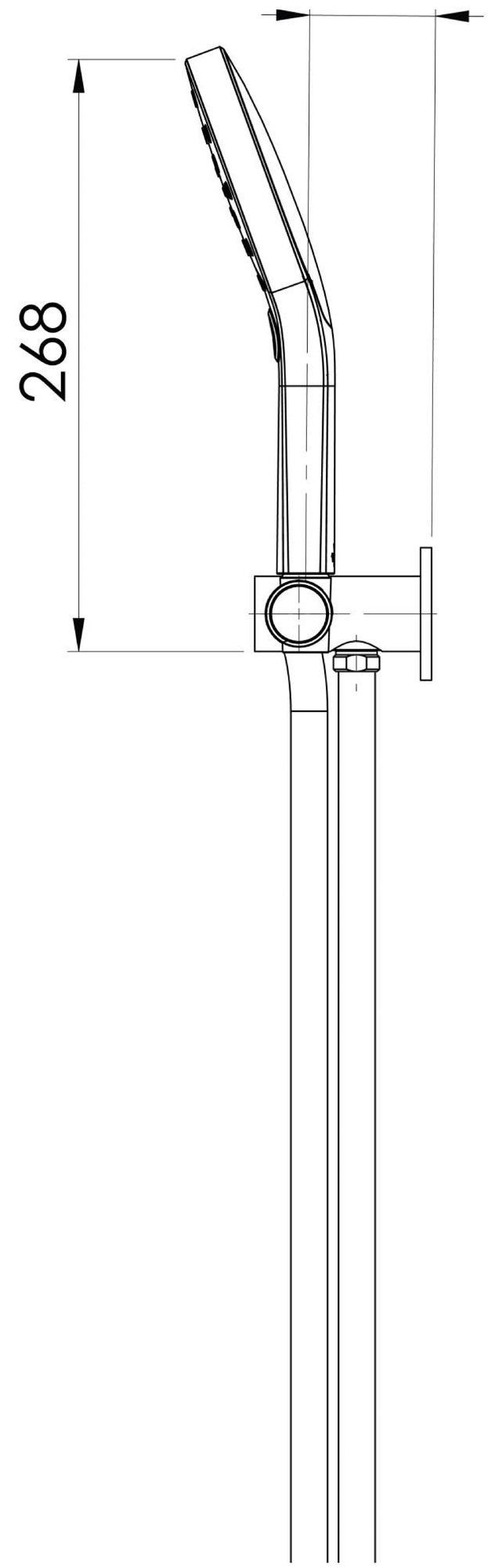
elenni
Kitchen & Bathroom Collection
customerservice@elenni.com.au
07 3299 3644